Built-in Installation Guide

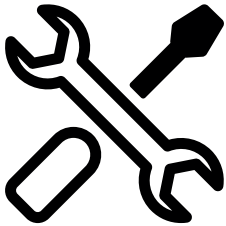

CE

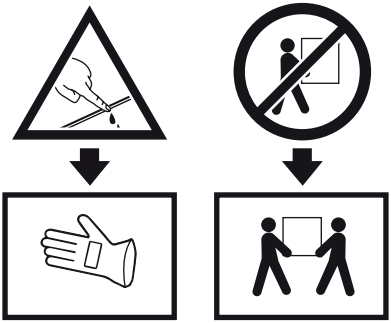

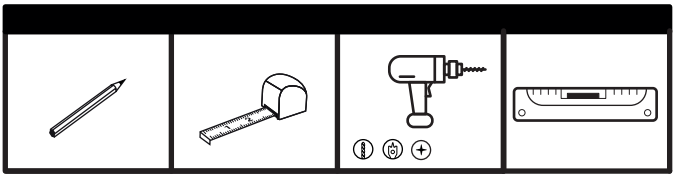

a	b	c	d	e
x8	x8	x2	x2	x2
Ø 4 x 16mm	M5 x 75mm			

f	g	h	i	j	k
x2	x2	x2	x1	x1	x4
					Ø 4 x 20mm

1

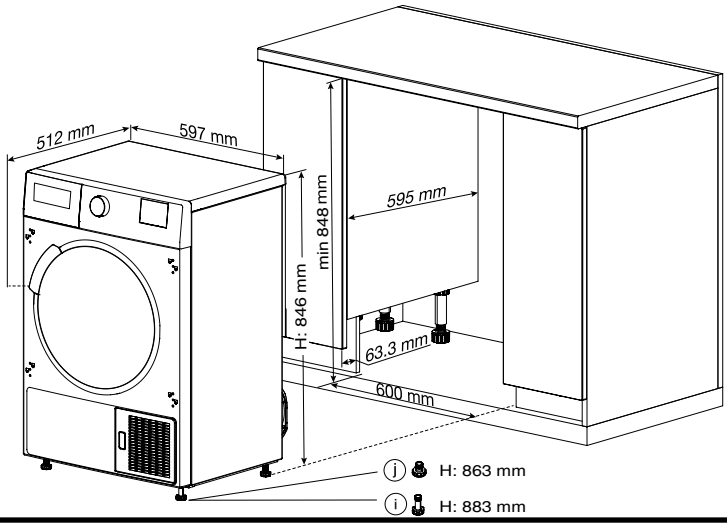

2

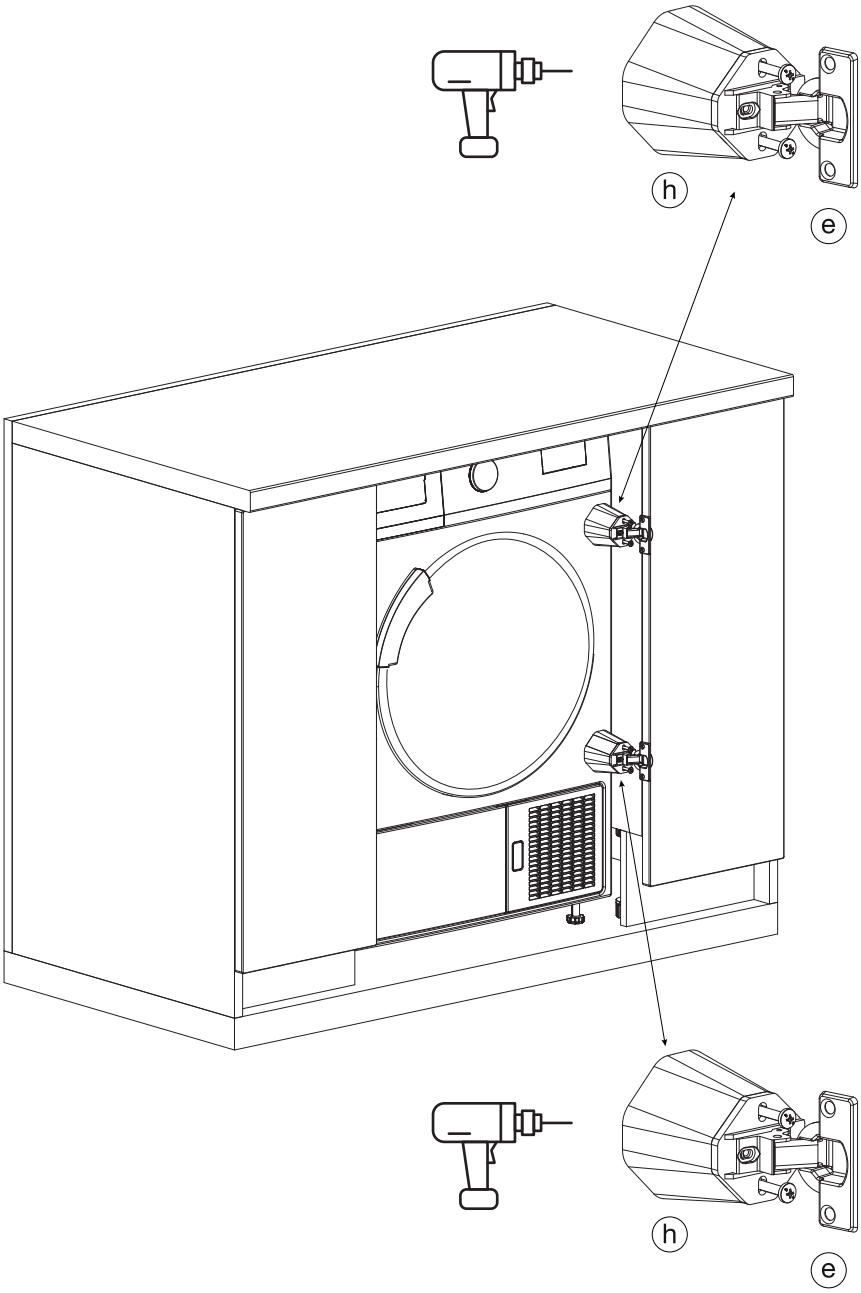

3

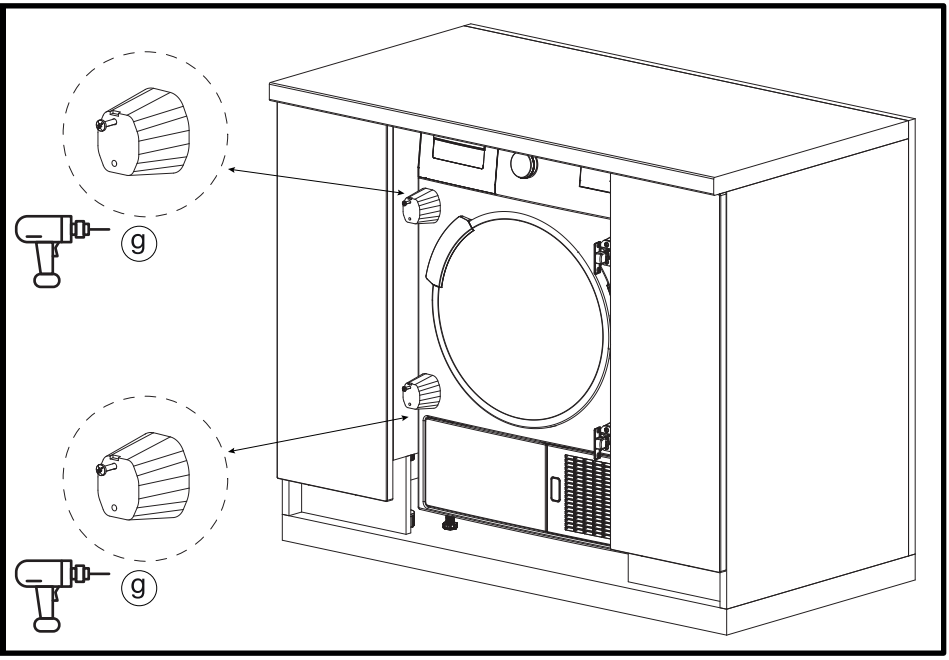

4

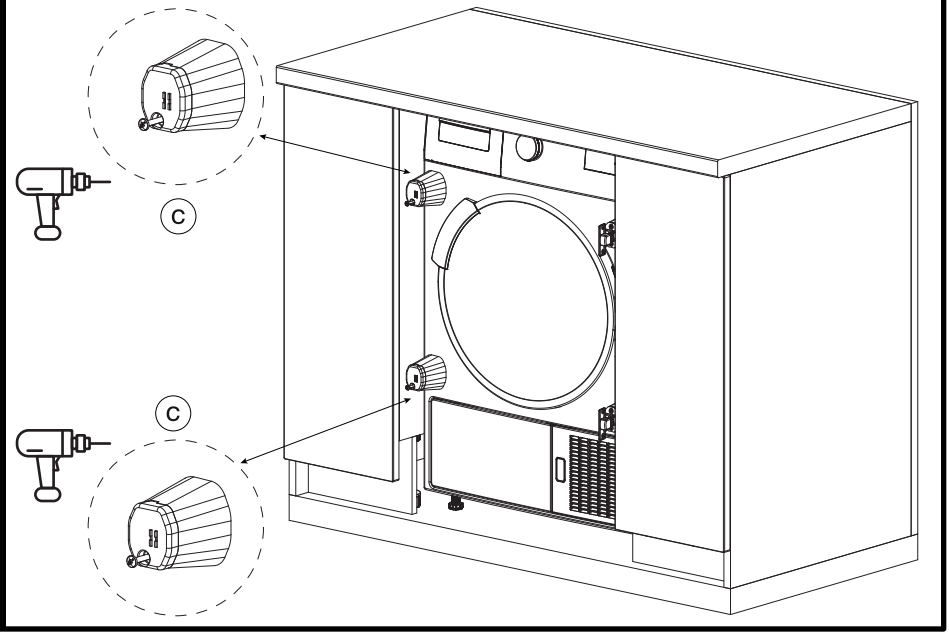

5

6

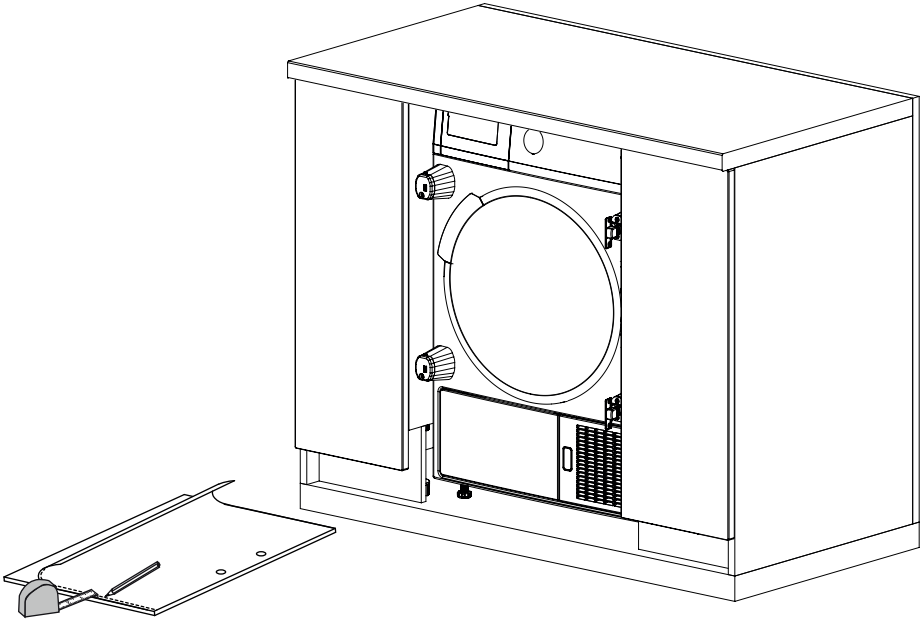

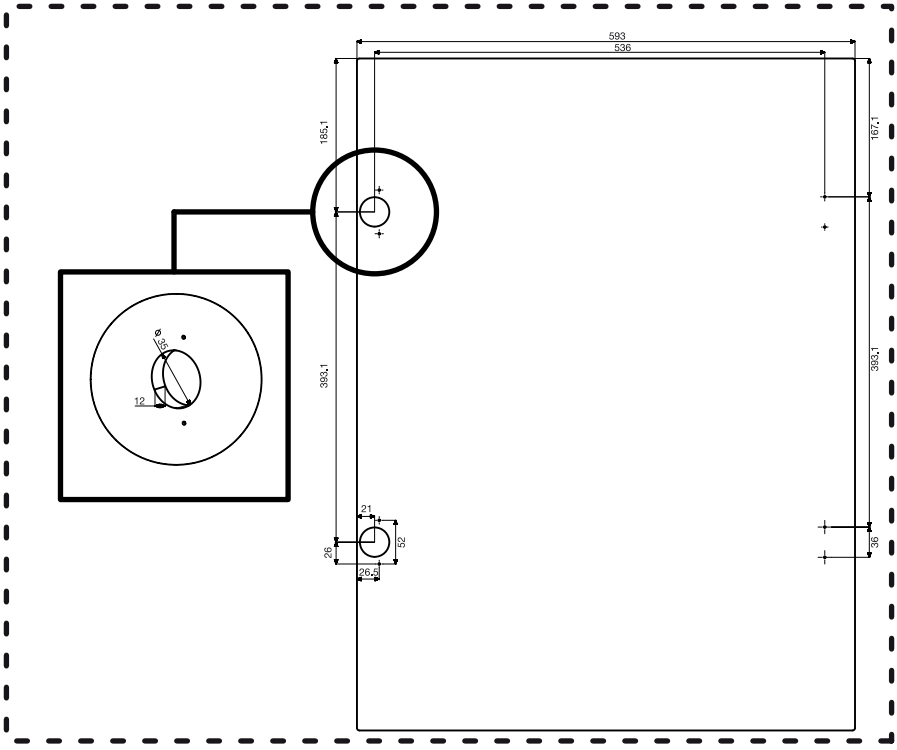

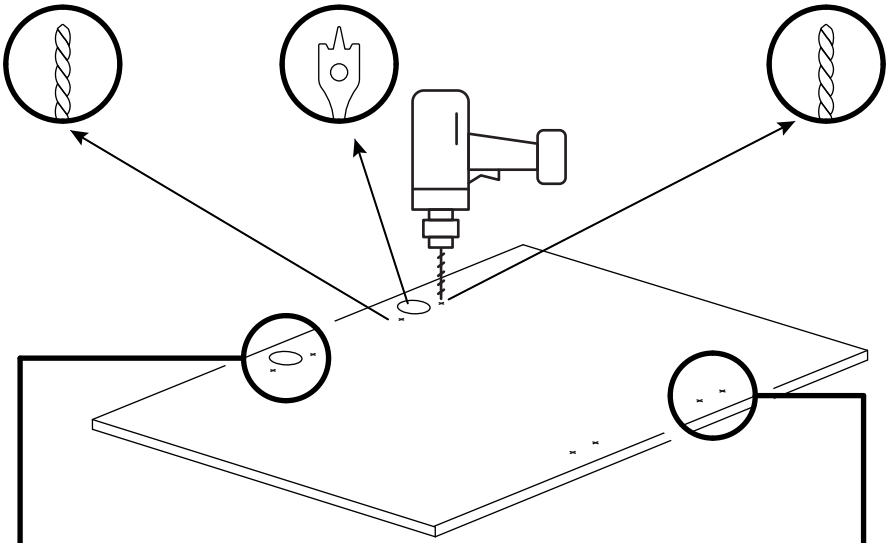

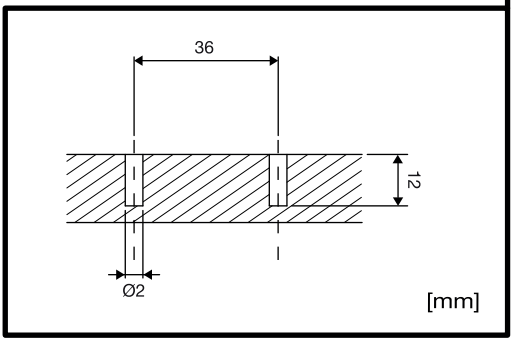
36
12
Ø2
[mm]

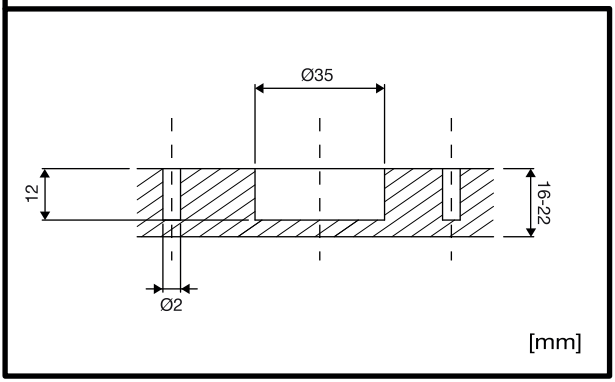
Ø35
12
16-22
Ø2
[mm]

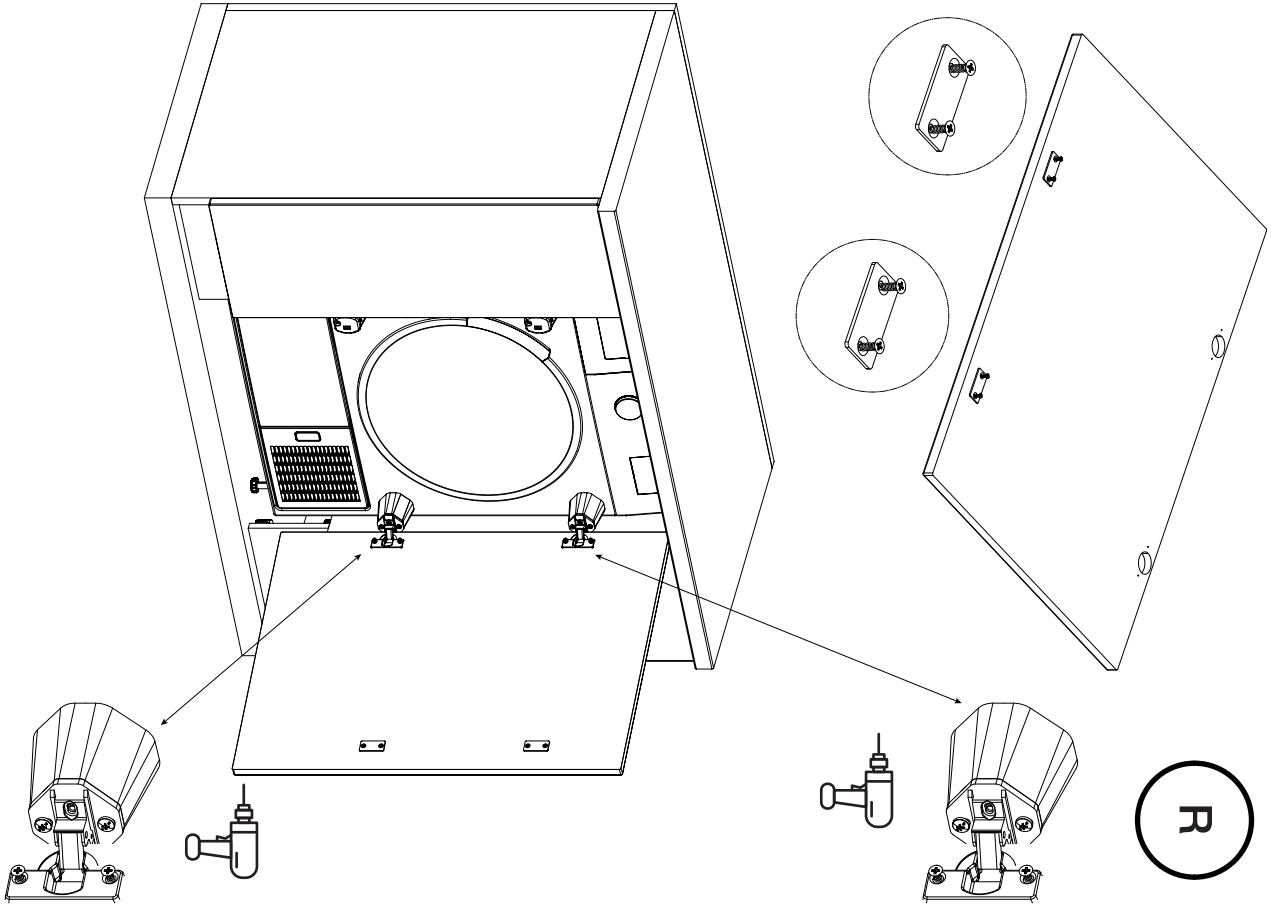
R

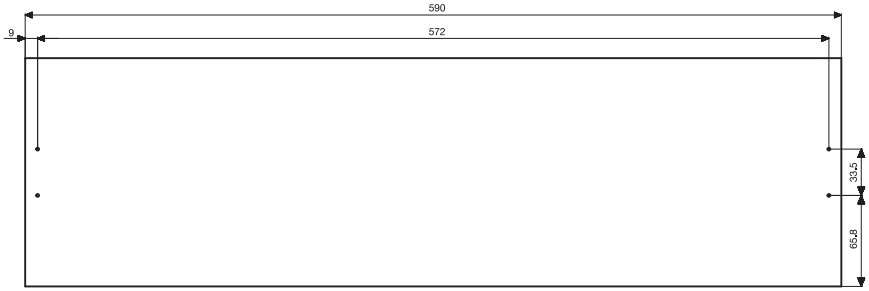
590
9
572
33,5
65,8

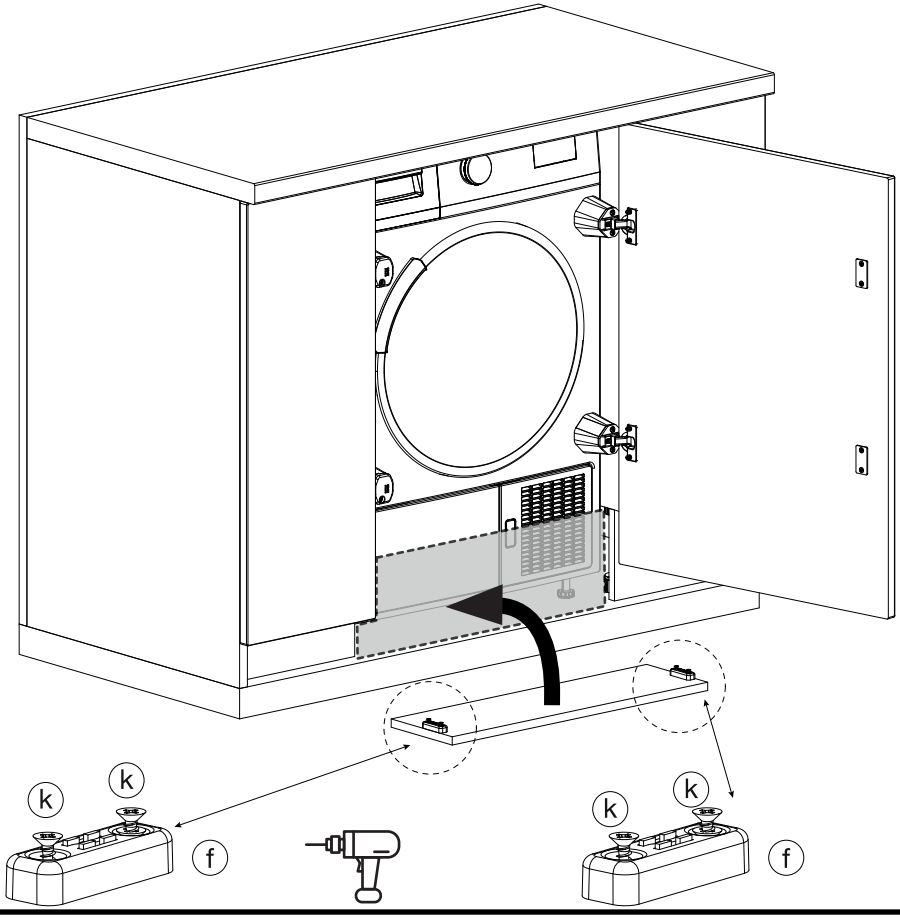
k
k
f
k
k
f

10

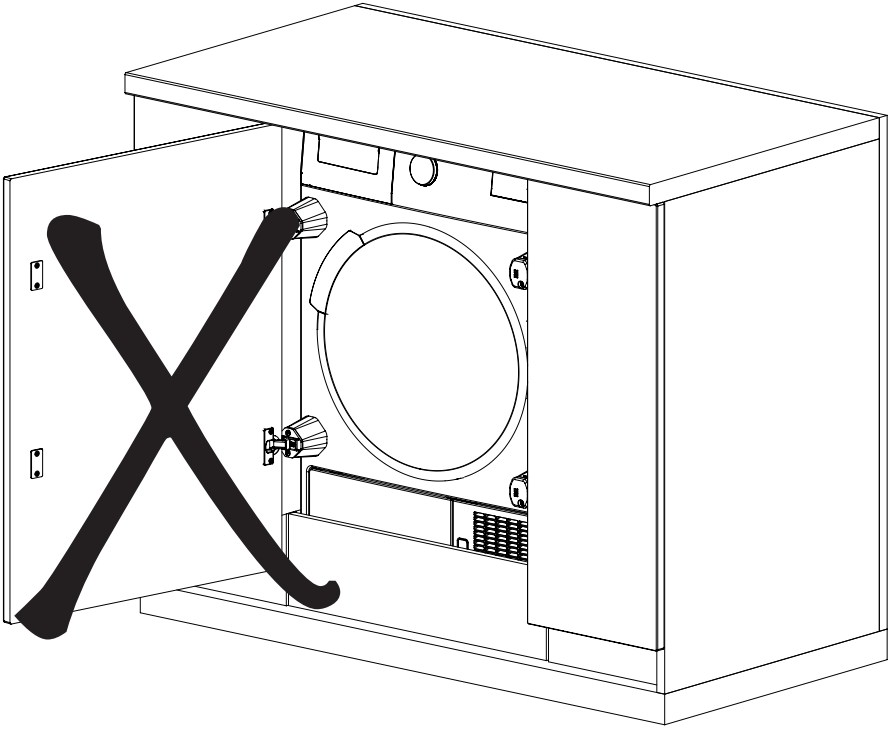
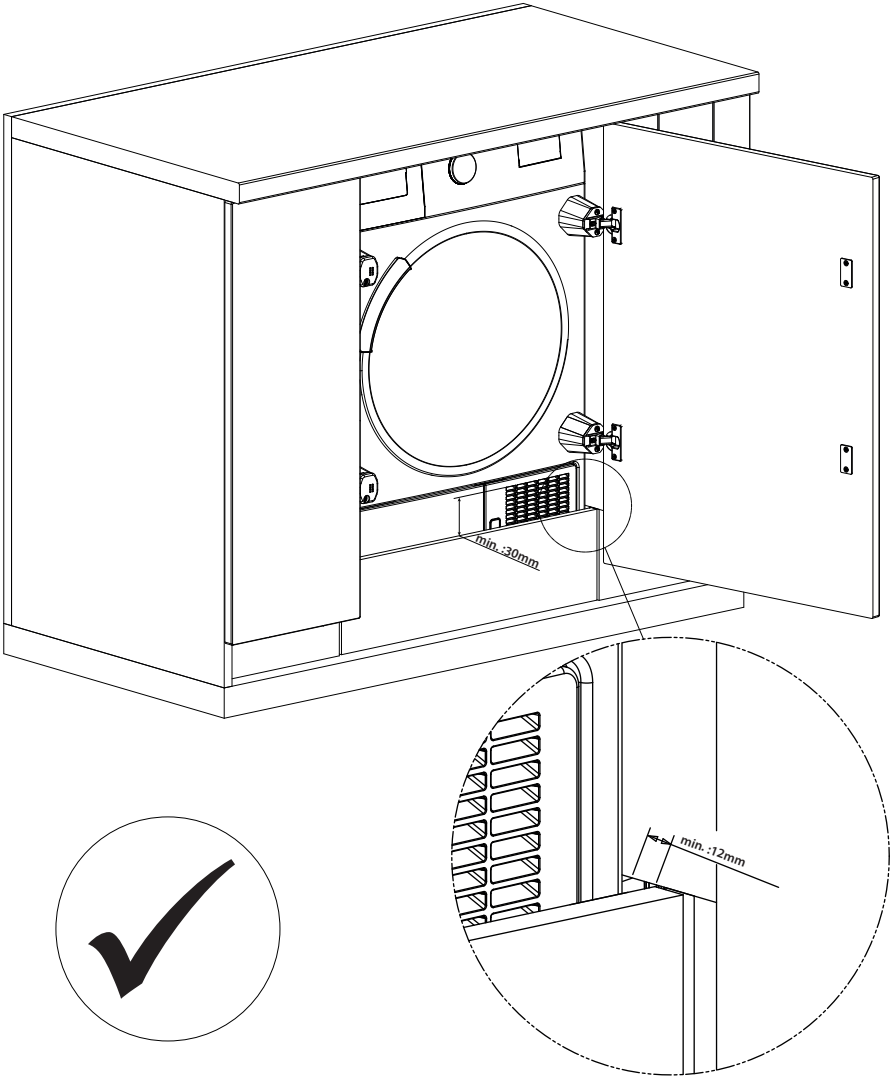
11