Dishwasher

User's Manual

DVS...
DFS...

CE

EN

17 4233 0100_AA_BEKO_45A6_EN/ 16-09-20.(16:32)

Dear Customer,
Please read this user manual before using the product.

Thank you for choosing this Beko product. We hope that you get the best results from your product which has been manufactured with high quality and state-of-the-art technology. Therefore, please read this entire user manual and all other accompanying documents before using the product.
Follow all warnings and information in the user manual. Thus, you can protect yourself and your product against potential dangers.
Keep the user manual. If you handover the product to someone else, give the user manual as well.

The following symbols are used in the user manual and on the packaging:

⚠ Danger that may result in death or injury.

NOTICE Danger that may result in damage to the product or its surroundings.

ⓘ Important information or useful hints about usage.

📖 Read the user manual.

CONTENTS

1 SAFETY INSTRUCTIONS 4

Intended Use 4
Safety for children, vulnerable persons and pets4
Electrical safety 5
Transportation Safety 5
Installation Safety 6
Operational safety 7
Maintenance and cleaning safety 8
Interior Lighting 8

2 ENVIRONMENTAL INSTRUCTIONS 8

Compliance with WEEE Directive and Disposing of the Waste Product 8
Package information 9
Technical specifications 10

3 YOUR DISHWASHER 11

Overview 11

4 INSTALLATION 12

Appropriate installation location 12
Connecting water supply 12
Aquasafe+ 13
Connection to the drain 14
Adjusting the feet 14
Electrical connection 14

5 PREPARATION 15

Tips for energy saving 15
Water softening system 15
Adjusting the water softening system 15
Adding salt 16
Detergent 16
Tablet detergents 18
Rinse aid 18
Items not suitable for washing in the dishwasher 19
Placing the dishes into the dishwasher 19
Cutlery basket 21
Cutlery basket 21
Collapsible lower basket tines 22
Collapsible lower basket tines 22
Tray Wash Supports 23
SoftTouch Accessory 23
Lower Basket Glass Holder 23
Lower basket multipurpose / height adjustable service rack 24
Lower basket bottle wire 25
Upper basket height adjustable rack 25
Upper basket multipurpose service rack 25
Adjusting the height of the upper basket 26
Collapsible upper basket wires 27
Height setting with empty basket 27
Ceiling cutlery basket 28
Ceiling cutlery basket 28

6 OPERATION OF THE PRODUCT 29

Keys 29
On-Off / Program Selection knob 29
Preparation of the machine 29
Program selection 29
Auxiliary functions 29
Programming the Washing Period 31
Starting of the program 31
Monitoring of Program 32
Cancelling the program 32
Low Salt Warning indicator 32
Low Rinse Aid Warning indicator 32
Setting the Rinse aid Amount 33
End of Program 33

7 MAINTENANCE AND CLEANING 34

Cleaning the outer surface of the product 34
Cleaning the interior of the machine 34
Cleaning the filters 34
Cleaning the hose filter 35
Cleaning the impellers 36
Lower impeller 36
Upper impeller 36

8 TROUBLESHOOTING 37

1-Safety Instructions

- This section contains safety instructions that will help get protected against risks of personal injury or property damage.
- Our company shall not be responsible for damages that may arise when these instructions are not followed.

⚠ Installation and repair procedures must always be performed by the manufacturer, authorised service agent or a qualified person specified by the importer.

⚠ Only use original parts and accessories.

⚠ Do not repair or replace any part of the product unless specified expressly in the user manual.

⚠ Do not make any technical modifications to the product.

Intended Use

⚠ This product is designed to be used in houses and indoor places. For example:

- Personnel kitchens in stores, offices and other working environments;
- Farm houses;
- Areas used by customers at hotels, motels and other types of accommodation;
- Bed&breakfast type hotels, boardinghouses.

⚠ This product must be used to do the domestic type dishes only.

⚠ This product is not suitable for commercial or collective use.

•

Safety for children, vulnerable persons and pets

⚠ This product can be used by children at and above 8 years old and by persons whose physical, sensory or mental capabilities were not fully developed or who lack experience and knowledge provided that they are supervised or trained on the safe usage of the product and the risks it brings out.

⚠ Children below the age of 3 must be kept away from the product unless they are continuously supervised.

⚠ Electrical products are dangerous for children and pets. Children and pets must not play with, climb on or enter inside the product.

⚠ Do not forget to close the door of the product when leaving the room where it is located. Children and pets may remain locked inside the product and suffocate.

⚠ Cleaning and user maintenance works should not be performed by children unless they are supervised by

someone.

⚠ Keep packaging materials away from children. There is the risk of injury and suffocation.

⚠ Store all detergents and additives used with the product in a safe place away from the reach of children.

⚠ For children's safety, cut the power cable and break the locking mechanism so that it will be non-functional before disposing of the product.

Electrical safety

⚠ The product must be unplugged during installation, maintenance, cleaning, repairing and moving procedures.

⚠ If the power cable is damaged, it must be replaced by a qualified person specified by the manufacturer, authorised service agent or importer in order to avoid potential dangers.

⚠ Do not squeeze the power cable under or behind the product. Do not place heavy objects on the power cable. Power cable must not be bent excessively, pinched or come into contact with any heat sources.

⚠ Do not use extension cords, multi-sockets or adapters to operate the product.

⚠ Plug must be easily accessible. If this is not possible, the electrical installation where the product is connected must contain a device which conforms to the electrical regulations and disconnects all poles from the grid.

⚠ Do not touch the power plug with wet hands.

⚠ Remove the plug from the socket by gripping the plug and not the cable.

Transportation Safety

⚠ Before transporting the product unplug it and disconnect its drain and water supply connections. Drain the remaining water in the product completely.

⚠ Product is heavy, do not move it alone.

NOTICE Do not hold the product from its door or panel to move it.

NOTICE If you need to move the product, do it in upright position and hold from the rear side. Slanting the product to front may cause the electronic parts in it to get wet and damaged.

NOTICE Make sure that the hoses do not get kinked, squeezed or crushed while placing the product into its location after installation or cleaning procedures.

Installation Safety

- To make the product ready for use, review the information in the user manual and installation instructions and make sure that the electricity, water supply and drain systems are appropriate. If they are not, call a qualified technician and plumber to have the necessary arrangements carried out. These procedures are under customer's responsibility.
- Prior to installation, check if the product has any defects on it. If the product is damaged, do not have it installed.
- Do not install the product in environments where the temperature falls below 0ºC.

⚠ Do not place the product on carpets or similar surfaces. This may cause fire hazard since the product will not be ventilated from below.

⚠ Place the product on a clean, flat and solid surface and balance it with adjustable feet. If the feet are not adjusted properly, the door will not be closed completely and cause hot steam to escape. Otherwise, it might cause serious burns and injuries, and harm your furniture.

⚠ Do not install the product close to heat sources (heater, stove and etc.) or under the cooking area of a hob.

- If the product is going to be used inside a wardrobe/cabinet/module, keep the doors of the wardrobe/cabinet/module open during operation in cases where there are no openings to provide sufficient air circulation.

⚠ Plug the product in a grounded socket protected by a fuse with current values as per type label of the product. Have the grounding installation made by a qualified electrician. Do not use the product without having the grounding made as per local/national regulations.

⚠ Plug the product in a socket that conforms the voltage and frequency values stated on the type label of the product.

⚠ Do not plug the product in sockets that are loose, dislocated, broken, dirty, greasy or bear the risk of getting in contact with water, such as places where there might be water leak from the counter.

NOTICE You must use the new hose set provided with the product. Do not reuse the old hose set. Do not make extension at the hoses.

NOTICE Connect the water inlet hose directly to the water tap.

Pressure coming from the tap should be 0.03 MPa (0.3 bars) minimum and 1MPa (10 bars) maximum. If the water pressure exceeds 1 MPa (10 Bars), a pressure relief valve should be installed in between.

⚠ Route the power cable and hoses in a way that they do not cause risk of tripping.

Operational safety

- Only dishwasher safe detergents, rinse aids and additives must be used.

⚠ Never use chemical solvents in the product. They bring forth the risk of explosion.

⚠ The wash-water inside the product is not potable.

⚠ Dishwasher detergents have high alkali content and can be very dangerous when ingested. Avoid letting them get into contact with skin and eyes and keep children away from the product when its door is open. Make sure that the detergent dispenser is empty after the washing cycle is complete.

⚠ When you pull the upper and lower baskets out completely, the door of the product will bear all the weight of the baskets. Do not sit or put other loads on the door; otherwise, the product may tilt.

ⓘ Maximum washing capacity of the product is stated in the section called **“Technical Specifications”**.

⚠ To prevent possible injuries, always place the sharp and pointed dishes such as service fork, bread knife, etc. upside down so as their pointed ends face down or they lie horizontally in the dish basket.

⚠ Open the door of the product carefully if you need to do so when the product is running. Be careful against hot steam that may escape or hot water that may spill.

⚠ Do not start the broken or damaged product. Unplug the product (or switch off the fuse it is connected to), turn off the water tap and call the authorised service agent.

⚠ Do not place flame sources (lit candles, cigarettes, etc.) on or close to the product. Do not keep combustable/ flammable substances close to the product.

⚠ Do not climb on the product.

- Unplug the product and close the tap if you are not going to use it for a long time.

Maintenance and cleaning safety

⚠ Do not wash the product by spreading or pouring water

onto it.

⚠ Do not use sharp or abrasive tools when cleaning the product. Do not use home cleaning products, detergent, gas, gasoline, thinner, alcohol, varnish etc.

NOTICE Do not forget to install the product's filter back after you have cleaned it. Otherwise, pumps will get clogged and product will be damaged.

Interior Lighting

⚠ Depending on the model of your product, call the authorised service agent when it is required to change the LED/bulb used for lighting.

Environmental Instructions

Compliance with WEEE Directive and Disposing of the Waste Product

This product complies with EU WEEE Directive (2012/19/EU). This product bears a classification symbol for waste electrical and electronic equipment (WEEE).

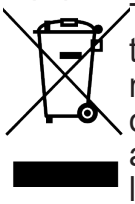

This symbol indicates that this product shall not be disposed with other household wastes at the end of its service life. Used device must be returned to official collection point for recycling of electrical and electronic devices. To find these collection systems please contact to your local authorities or retailer where the product was purchased. Each household performs important role in recovering and recycling of old appliance. Appropriate disposal of used appliance helps prevent potential negative consequences for the environment and human health.

Compliance with RoHS Directive

The product you have purchased complies with EU RoHS Directive (2011/65/EU). It does not contain harmful and prohibited materials specified in the Directive.

Package information

Packaging materials of the product are manufactured from

recyclable materials in accordance with our National Environment Regulations. Do not dispose of the packaging materials together with the domestic or other wastes. Take them to the packaging material collection points designated by the local authorities.

Note for test institutions:
Data required for performance tests shall be provided upon request. Requests can be e-mailed to the following address:
dishwasher@standardloading.com
Do not forget to provide the code, stock number and serial number of the product to be tested in your request e-mail along with your contact information. Code, stock number and serial number of the product may be found on the type label attached to the side wall of the door.

Compliance to standards and test data/EC declaration of conformity

Development, production and sales stages of this product comply with the safety rules included in all pertaining European Community regulations.
2014/35/EU, 2014/30/EU, 93/68/EC, IEC 60436 / EN 60436

The model information as stored in the product database can be reached by entering following website and searching your model identifier (*) found on energy label.

https://ec.europa.eu/

ENERG

XXXXXXXXXX (*)

A

Technical specifications

Maximum washing capacity (check the energy label and Programme data and average consumption values table given on Quick Guide.)
Height (check installation document for installation)
Width: 45
Depth: 57
Power input: 220-240 V, 50 Hz *
Total power 1800-2100 W *
Heater power: 1800 W *
Total current: 10 A *
Pump power: 90 - 125 W *
Drain pump power: 30 W *
* For detailed electrical values, check the type label on the machine door.
Water Pressure 0.3 –10 bar (= 3 – 100 N/cm² = 0.03-1.0 Mpa)

Technical specifications may be changed without prior notice to improve the quality of the product.

Figures in this manual are schematic and may not match the product exactly.

Values stated on the markings of the product or in the printed documents accompanying the product are obtained in the laboratory on basis of the relevant standards. These values may vary according to the usage of the product and ambient conditions.

3- Your dishwasher

Overview

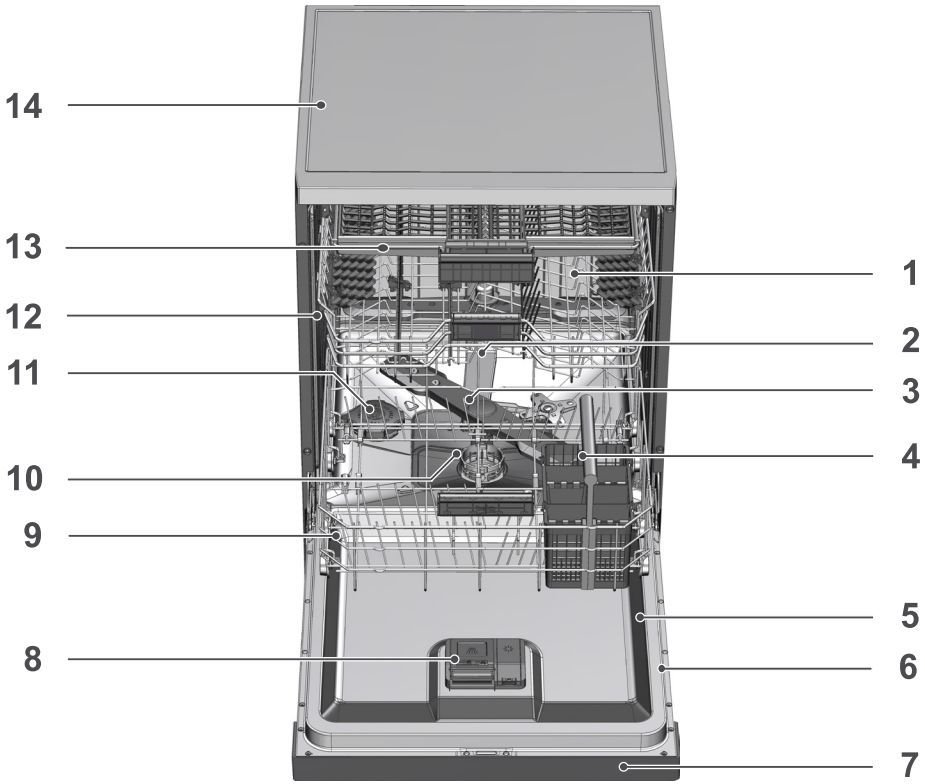

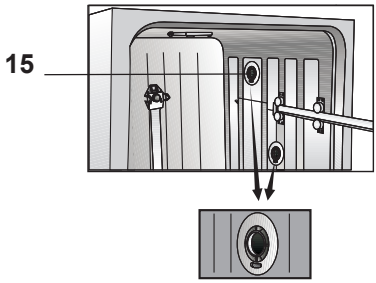

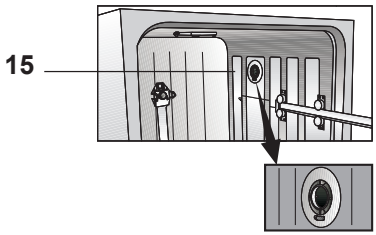

1. Upper basket
2. Upper impeller
3. Lower impeller
4. Cutlery basket (depends on model)
5. Door
6. Rating Label
7. Control panel
8. Detergent dispenser
9. Lower basket
10. Filters
11. Salt reservoir lid
12. Upper basket rail
13. Upper cutlery basket (depends on model)
14. Tabletop (depends on model)
15. Fan drying system (depends on model)

4- Installation

Read “Safety Instructions” section first! Installation procedures must always be performed by the manufacturer, authorised service agent or a qualified person specified by the importer. To make the product ready for use, make sure that the electricity, tap water supply and water drainage systems are appropriate before calling the authorised service agent. If they are not, call a qualified technician and plumber to have the necessary arrangements carried out.

Preparation of the location and electrical, tap water and waste water installations at the place of installation is under customer's responsibility.

Installation and electrical connections must be carried out by the authorised service agent. Manufacturer shall not be held responsible for damages arising from processes carried out by unauthorised persons.

Prior to installation, check if the product has any defects on it. If the product is damaged, do not have it installed. Damaged products cause risks for your safety.

Make sure that the water inlet and discharge hoses are not folded, pinched or crushed while pushing the product into its place after installation or cleaning procedures.

The front of the appliance may not be removed on free-standing or under-the-counter models. The warranty will be void if this is done.

When placing the product, pay attention not to damage the floor, walls, piping, etc. Do not hold the product from its door or panel to move it.

Appropriate installation location

In the area where this product is installed, there must not be a lockable, sliding or hinged door that will restrict full opening of the product’s door.

Make sure that you select a location that will allow you to load and unload the dishes in a fast and comfortable manner.

- Place the product on a solid and flat floor that has sufficient load carrying capacity! The product must be installed on a flat surface in order for the door to be closed properly and securely.
- Do not install the product at places where temperature may fall below 0ºC.
- Place the product on a hard floor. Do not place it on a long pile rug or similar surfaces.

Do not place the product on the power cable.

- Make sure that you select a location that will allow you to load and unload the dishes in a fast and comfortable manner.
- Install the product at a place close to the tap and the drain hole. Select the installation location by considering that it will not be changed after the connections are made.

Connecting water supply

We recommend installing a filter at the water inlet in order to prevent the dirt (sand, clay, rust) in the mains or water installation of your home from damaging the machine or the dishes.

Permitted water temperature: up to 25°C (60°C for products equipped with Aquasafe+; please refer to Aquasafe+ section)
The dishwasher may not be connected to open warm water devices or flow-through water heaters.

NOTICE Do not use an old or used water inlet hose on the new product. Use the new water inlet hose supplied with the product. Do not make extension at the hoses.

NOTICE Connect the water inlet hose directly to the water tap. Pressure coming from the tap should be 0.3 bars minimum and 10 bars maximum. If the water pressure exceeds 10 bars, a pressure relief valve should be installed in between.

NOTICE The water supply and draining hoses must be securely fastened and remain undamaged.

NOTICE Open the taps completely after making the connections to check for water leaks.

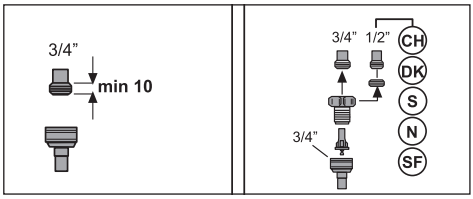

Aquasafe+

(depends on the model)
The Aquasafe+ system protects against water leaks that may occur at the hose inlet.Water contact with the valve box of the system must be avoided to prevent damage to the electrical system.

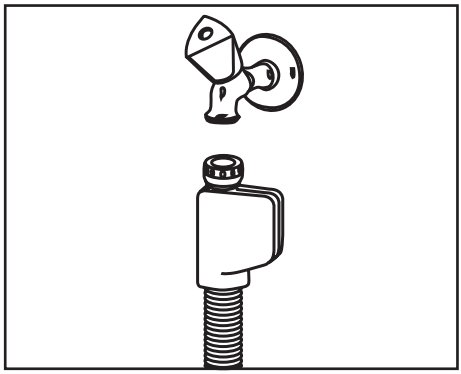

⚠ As the hose set contains electrical connections and assemblies, never shorten or lengthen the hose with extension hoses.

⚠ If the Aquasafe+ system is damaged, unplug the product and call the authorised service agent.

Connection to the drain

Water discharge hose can directly be connected to the drain hole or sink's drainage. See the installation manual supplied with your machine for detailed information.

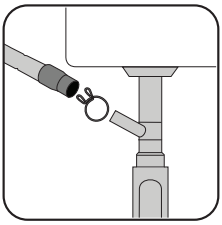

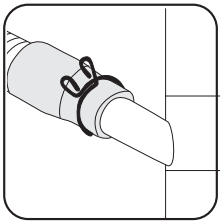

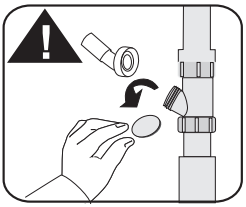

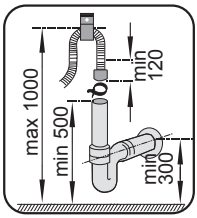

Drain pipe must be connected to the sewage system and it should not be connected to any surface water.

Adjusting the feet

If the door of the product cannot be closed properly or if the product rocks when you push it slightly, then you need to adjust the feet of the product. Adjust the feet of the product as illustrated in the installation manual supplied with the product.

Steam may escape if the door of the dishwasher is not adjusted properly. Hot steam may cause serious burns and injuries and damage your furniture.

Electrical connection

Connect the product to a grounded outlet protected by a fuse complying with the values in the "Technical specifications" table. Our company shall not be liable for any damages that will arise when the product is used without grounding in accordance with the local regulations.

- Connection must comply with national regulations.
- Power cable plug must be easily accessible after installation.
- Plug in the product to a grounded socket which is protected by a fuse of 16 Amperes.
- The specified voltage must be equal to your mains voltage.

Do not make connections via extension cables or multi-plugs.

Damaged power cables must be replaced by the authorised service agent.

5- Preparation

⚠ Read “Safety Instructions” section first!

Tips for energy saving

Following information will help you use the product in an ecological and energy-efficient manner.
Wipe away any coarse food remnants on the dishes before putting them in the product.
ⓘ Manual pre-rinsing of tableware items leads to increased water and energy consumption and is not recommended.
ⓘ Washing tableware in a household dishwasher usually consumes less energy and water in the use phase than hand dishwashing when the household dishwasher is used according to the manufacturer’s instructions.
Operate the product after filling it completely.
When selecting a programme, consider the table of "Programme data and average consumption values" given on Quick Guide.
Do not put more detergent than suggested on the detergent package.

Water softening system

The product is equipped with a water softening system which reduces the hardness of incoming water. This system softens the supply water to a level that will allow washing the dishes with the required quality.

ⓘ The mains water hardness must be softened if it is over 7°dH. Otherwise, hardness ions will accumulate on the dishes that are washed and may affect the washing, rinsing and drying performances of the machine.

Adjusting the water softening system

Washing performance will increase when water softening system is adjusted properly.

ⓘ Read “Quick Guide - Adjusting Water Softening System” before this section!

The regeneration of the water softening system can be done in all programmes during drying step. When regeneration occurs, duration, energy and water consumption of the programme increase. For regeneration process; frequency of regeneration cycle, maximum additional duration, water and energy consumption are given in table below depending on Eco 50°C programme water consumption, when the dishwasher is run under standard conditions with 14 dH water supply on its Eco 50°C programme:

Eco 50°C water consumption (l)	Regeneration after .... cycles	Additional duration (min)	Additional water consumption (l)	Additional energy consumption (kWh)
12,3-14,7	5	5	3,0	0,05
9,6-12,2	6	5	3,0	0,05
9,0-9,5	7	5	3,0	0,05
8,0-9,0	8	5	3,0	0,05
7,0-7,9	9	5	3,0	0,05

For the water consumption of your dishwasher on Eco 50°C programme, look at the Programme data and average consumption values table given on Quick Guide.

Adding salt

Water softening system needs to be regenerated in order for the product to operate with the same performance continuously. Dishwasher salt is used for this purpose.

ⓘ Use only special softening salts produced particularly for the dishwashers in your machine.

ⓘ It is recommended to use granule- or powder-formed softening salts in the water softening system. Do not use salts that do not completely dissolve in water such as table salt or rock salt. Otherwise the performance of the system may deteriorate in time.

ⓘ Salt reservoir will be filled with water when you start the product. For this reason, add salt before operating the machine.

1. Firstly, take the lower basket out to add softening salt.
2. Turn the salt reservoir lid counter-clockwise to open it (A).

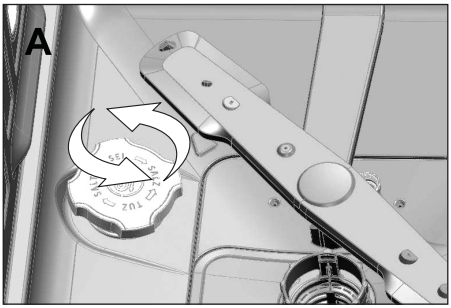

3. Add 1 liter of water to salt reservoir of your machine only in initial use.
4. Fill the salt reservoir with salt by using the salt funnel (D). To speed up dissolution rate of salt in water, stir it with a spoon.

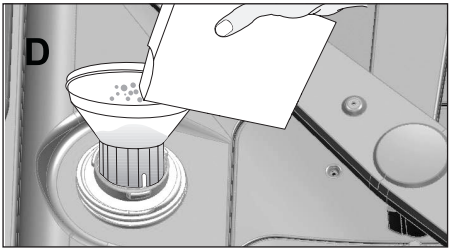

ⓘ You can put about 2 kg of softening salt into the salt reservoir.

5. Replace the lid and tighten it when the reservoir is full.

ⓘ You need to add salt right before starting the machine. Thus, the overflowing salty water will be flushed immediately, preventing the risk of corrosion in machine. In cases where you would not start washing immediately, run your machine empty in the shortest programme.

ⓘ Since different salt brands in the market have different particle sizes and since the water hardness may vary, dissolution of the salt in water may take a couple of hours. Therefore, Salt Indicator remains on for a while after adding salt into the machine.

Detergent

You can use powder, liquid/gel or tablet detergents in the machine.

⚠ Only use detergents produced particularly for use with dishwashers. Note that detergents that contain chlorine and phosphate can be harmful for the environment. Liquid detergents without chlorine may not remove tea and coffee stains from cups.

Adding detergent

ⓘ Pay attention to the warnings on the detergent packaging to get better washing and drying results. Contact the manufacturer of the detergent for

further questions.

⚠ Do not put solvents into the detergent dispenser. There is the risk of explosion!

Put the detergent into the detergent dispenser just before operating the machine as illustrated below.

1. Push the latch to right to open the detergent dispenser lid (A). (depends on model)

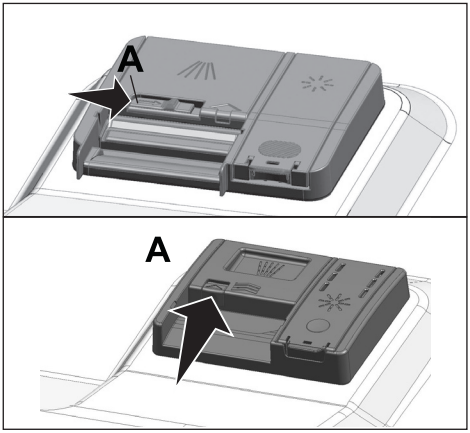

2. Put suggested amount of powder, liquid/gel or tablet detergent in the reservoir.

ⓘ Inside the detergent dispenser there are level markings that help you use appropriate amount of powder detergent. When brimful, detergent dispenser will contain 45 cm³ of detergent. Fill detergent up to 15 cm³ or 25 cm³ level marks in the detergent dispenser according to fullness of the machine and/or soiling degree of the dishes. One tablet is enough if you are using detergent tablets.

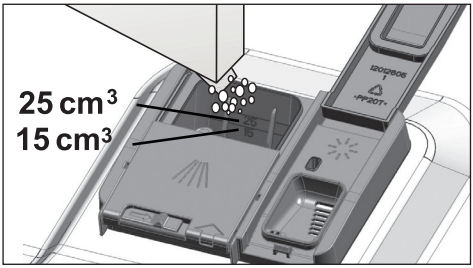

3. Push the lid of the detergent dispenser to close it. A "click" will be heard when the lid is closed.

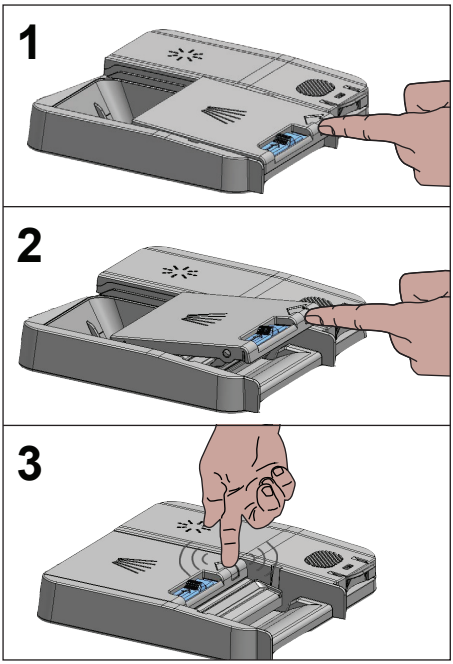

ⓘ Use powder or liquid/gel detergent in short programmes without prewash since the solubility of the tablet detergent changes depending on the temperature and time.

Tablet detergents

In addition to the conventional tablet detergents, there are also commercially available detergent tablets that show water softening salt and/or rinse aid effect. Some types of these detergents contain special-purpose components such as glass and stainless steel protectors. These tablets show their effects up to a certain water hardness level (21°dH). Water softening salt and rinse aid must also be used together with the detergent if the water hardness level is above the mentioned level.

ⓘ The best washing performance in dishwashers is obtained by using detergent, rinse aid and water softening salt individually.

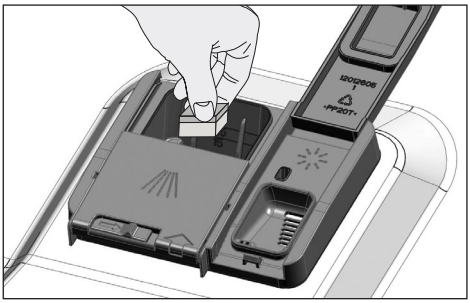

ⓘ Observe the instructions of the detergent manufacturer on the package when using tablet detergents.

ⓘ Contact the detergent manufacturer if your dishes are wet and/or if you notice limescale spots particularly on your glasses after the washing programme is over when using a tablet detergent.

When you switch to powder detergent from tablet detergent:

1. Make sure that salt and rinse aid reservoirs are full.
2. Set the water hardness to the highest level and perform an empty run.
3. After the empty washing cycle, review the user manual and readjust the water hardness level so as to suit the water supply.
4. Make the appropriate rinse aid settings.

Rinse aid

ⓘ The rinse aid used in dishwashers is a special combination that aims to increase drying efficiency and prevent water or lime stains on the washed items. For this reason, care must be paid to have rinse aid in the rinse aid reservoir and to use rinse aids produced specially for dishwashers only.

1. Open the lid of the rinse aid reservoir with the help of the latch.

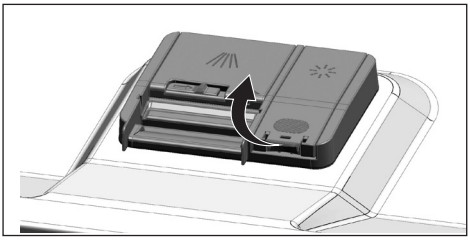

2. Fill the reservoir until “MAX” level.

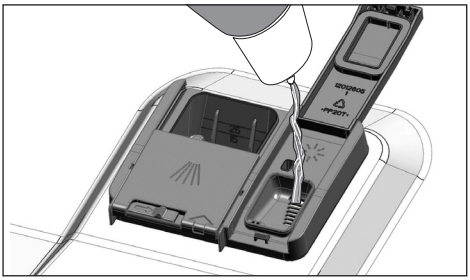

3. Slightly press the point (B) of the reservoir lid to close it.

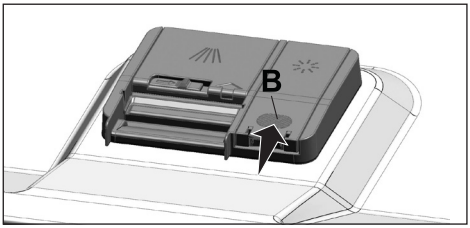

4. If there are stains on tableware items after washing, level must be increased and if there is a blue trace after wiping them by hand, it must be decreased. This is set to position 3 as factory default.

ⓘ The rinse aid adjustment is described under "Adjusting the amount of rinse aid" in the section for operating the machine.

ⓘ Wipe clean any spilled rinse aid outside the reservoir. Rinse aid that spilled accidentally will cause foaming and it will eventually decrease washing performance.

Items not suitable for washing in the dishwasher

- Never wash dishes soiled by cigarette ash, candle remnants, polish, dyestuff, chemicals, etc. in your dishwasher.
- Do not wash silverware and cutlery with wooden or bone stems, glued pieces, or pieces that are not resistant to heat, as well as copper and tin-plated containers in the dishwasher.

ⓘ Decorative prints of chinaware as well as aluminium and silver items may get discoloured or tarnished after washing in the dishwasher just as it happens in handwashing as well. Some delicate glass types and crystals may become dull in time. We strongly recommend you to check if the tableware you are going to purchase is suitable for washing especially in the dishwasher.

Placing the dishes into the dishwasher

Depending on the capacity of your dishwasher, you can use your dishwasher in the optimum way with respect to energy consumption and washing and drying performance only if you place the dishes in an orderly way.

- Wipe away any coarse food remnants (bones, seeds, etc.) on the dishes before placing them in the dishwasher.
- Place thin, narrow pieces in the middle sections of baskets if possible.
- Place the heavily soiled and bigger items in the lower basket and smaller, delicate and light items in the upper basket.
- Place the hollowed dishes such as bowls, glasses and pans upside down in the dishwasher. Thus, accumulation of water in deep hollows is prevented.

⚠ To prevent possible injuries, always place the sharp and pointed dishes such as service fork, bread knife, etc. upside down so as their pointed ends will face down or lay them horizontally in the dish basket.

Unload dishes in the lower basket first and then the dishes in the upper basket.

Suggestions for loading the dishwasher

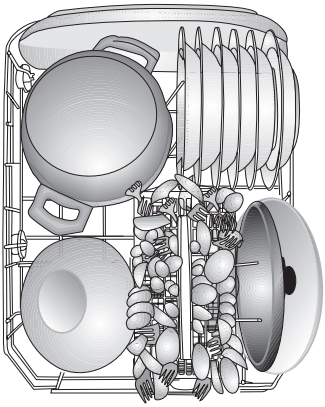

Lower basket

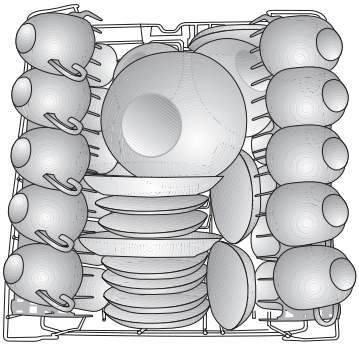

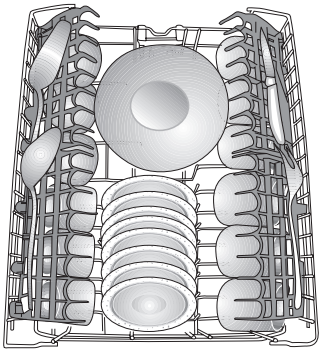

Upper basket

Improper Loading Of Dishware

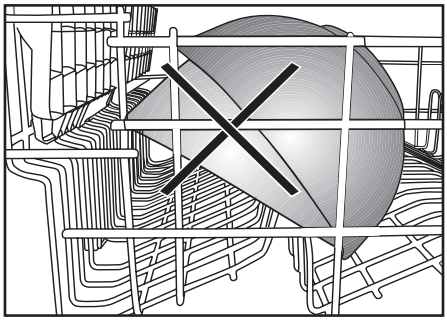

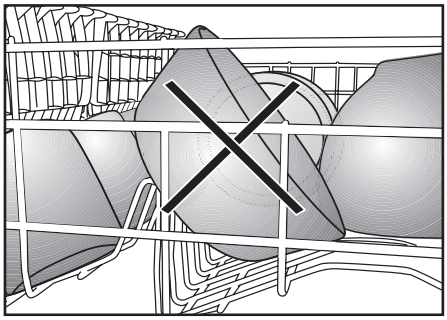

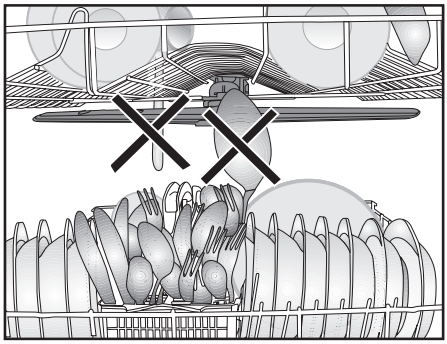

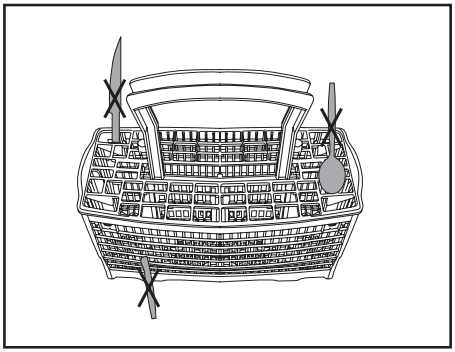

Cutlery basket

(depends on model)
Cutlery basket is designed to wash your dishes such as knife, fork, spoon, etc. in an efficient manner.
Since the cutlery basket can be moved (A, B), you can create more space while placing your dishes in the lower basket and free up space for your dishes of different sizes.

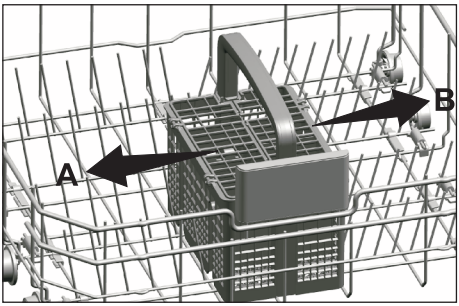

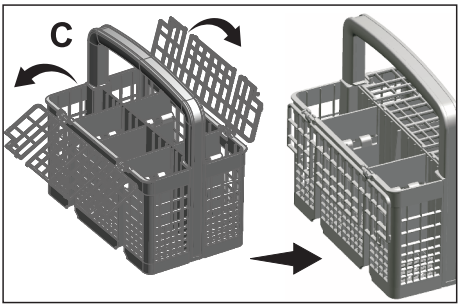

Collapsible lower basket tines

(depends on model)
Foldable tines (A) located at the lower basket of the machine are designed for an easier placement of large pieces such as pans, bowls, etc. You can create larger spaces by folding each tines individually or all of them at once.

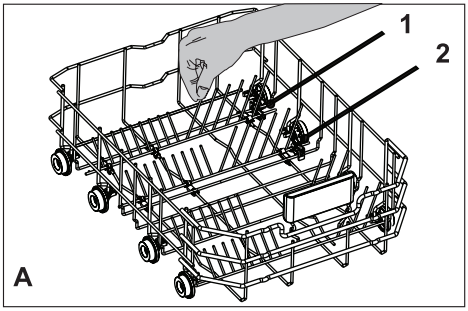

To bring the collapsible tines into horizontal position, grab the tines from mid position and push them in the directions of arrows (B). To bring the tines back to vertical position, just lift them up. Collapsible tines will click into the latch again (C).

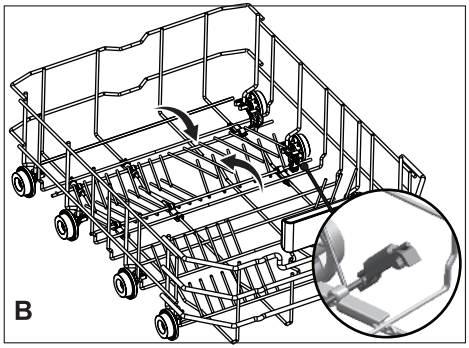

Bringing the tines to the horizontal position by holding them from the tips may cause them to bend. Therefore, it will be appropriate to bring the tines in the middle to horizontal or vertical position by holding them from their stems and pushing in the direction of arrow.

Collapsible lower basket tines

(depends on model)
Foldable tines (A) located at the lower basket of the machine are designed for an easier placement of large pieces such as pans, bowls, etc. You can create larger spaces by folding each tines individually or all of them at once.

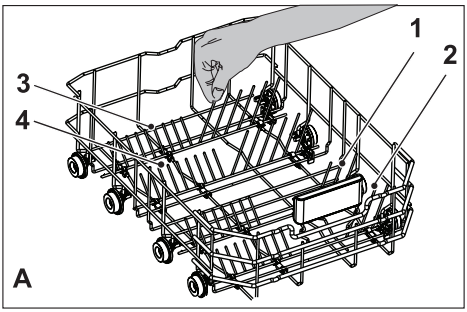

To bring the collapsible tines into horizontal position, grab the tines from mid position and push them in the directions of arrows (B). To bring the tines back to vertical position, just lift them up. Collapsible tines will click into the latch again (C).

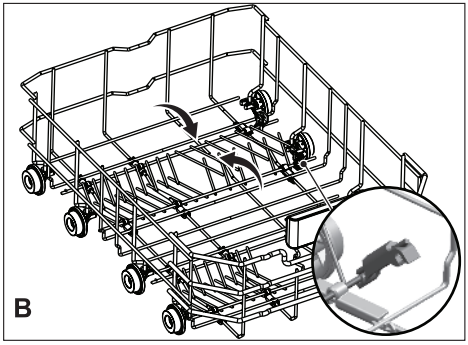

Bringing the tines to the horizontal position by holding them from the tips may cause them to bend. Therefore, it will be appropriate to bring the tines in the middle to horizontal or vertical position by holding them from their stems and pushing in the direction of arrow.

Upper basket rack

(depends on model)

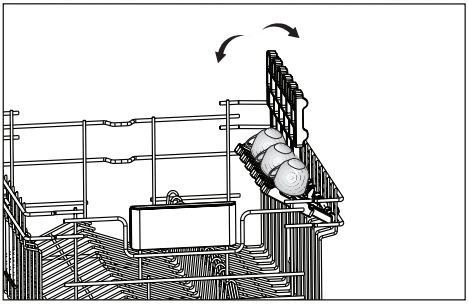

Lower basket bottle wire

(depends on model)

The bottle wire is designed for easier washing of long pieces with wide mouths. You may take out the bottle wire from the basket when not in use by pulling it out from both sides (H).

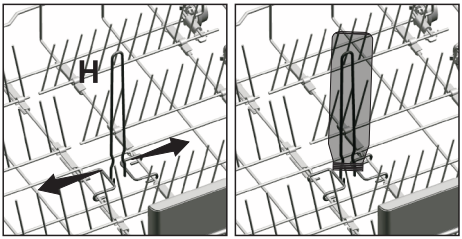

Upper basket multipurpose service rack

(depends on model)

This accessory located at the upper basket of your machine allows you to easily wash pieces such as extra long ladles and bread knives.

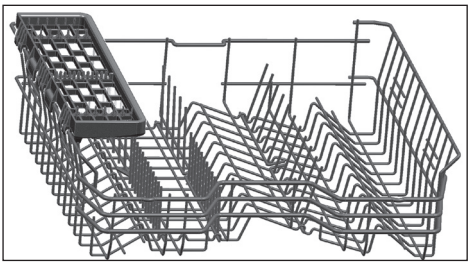

You can lift up the upper basket multipurpose service rack to remove it if you do not want to use it.

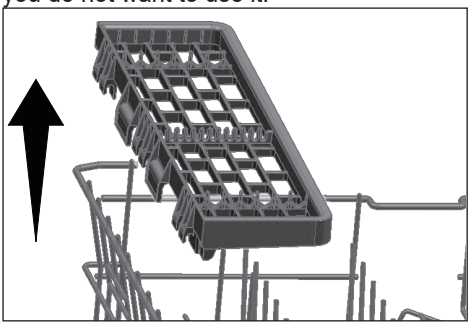

If you want to use the upper basket multipurpose service rack again, you can easily attach it to the side section of your upper basket.

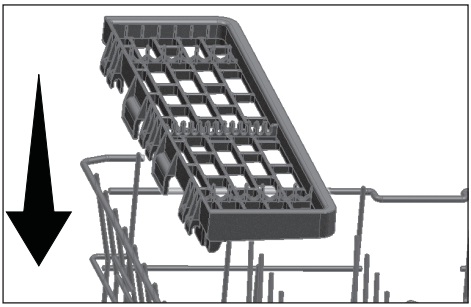

Adjusting the height of the upper basket

(depends on model)
The upper basket height adjustment mechanism has been designed for you to create large spaces in the lower or upper sections of your machine depending on your needs by adjusting the height in the upper or lower direction while your basket is empty or loaded.

Thanks to this mechanism, you can use your basket in three different positions, namely lower, middle and upper positions (1, 2, 3).

1. To raise your basket, hold the upper basket wires with both hands while the basket is in the lowermost position and pull them up (A).
2. You will hear a "Click" from the right and left mechanisms, indicating that the basket has reached the next level. Release the basket.

Repeat the process if the height is not sufficient.

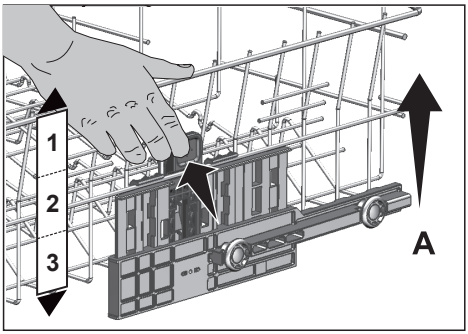

To lower the basket, while it is in the uppermost position;

1. Hold the upper basket wires with both hands, slightly lift up the basket and simultaneously push and release the latches shown in the figure (B).
2. Lower the basket from its current position to the lower one.
3. Release the basket after it has reached one level down.

Repeat the process if the height is not sufficient.

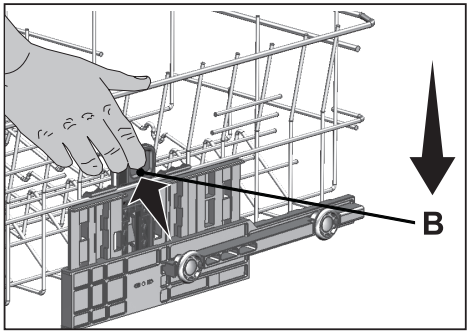

ⓘ The movement mechanism may not function properly if the upper basket is overloaded or if the weight distribution is not balanced. In heavier conditions, there is the risk of falling one level down.

ⓘ Make sure that the adjustment mechanism has the same positions on the right and left sides of the upper basket.

Ceiling cutlery basket

(depends on model)
Ceiling cutlery basket is designed to wash your cutlery items such as forks, spoons and etc. by placing them between the bars on the basket.

Collapsible upper basket wires

(depends on model)
You can use collapsible wires when you need a larger space for your dishes in the upper basket of your machine.
To bring the collapsible wires into horizontal position, grab the wire from the middle position and push them in the direction of arrow in the figure. Place your larger dishes into the area created. To bring the wires back to vertical position, just lift them up.

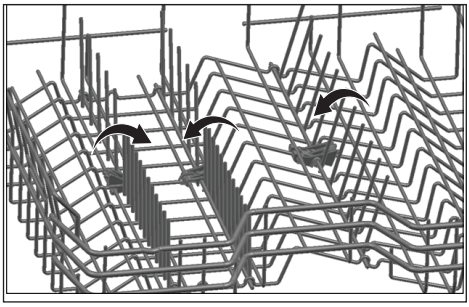

Bringing the wires to the horizontal position by holding them from the tips may cause them to bend. Therefore, hold the wires from their stems while bringing them to the horizontal or vertical positions.

6-Operation of the product

⚠ Read “Safety Instructions” section first!

ⓘ Read “Quick Quide” before this section.

Keys

On-Off / Program Selection knob

When you select a program with the On-Off / Program Selection knob, On Warning control light is illuminated, and it is turned off when you bring the knob to Off position.

Start / Pause / Cancel key

Used for starting, holding or cancelling the selected program.

Time Delay key

It is used to set the time delay duration.

Preparation of the machine

1. Open the door of the dishwasher.
2. Load your dishes as described in the user manual.
3. Ensure that lower and upper propellers are rotating freely.
4. Add adequate amount of detergent in the detergent compartment.
5. Inspect whether low salt and low rinse aid indicators are illuminated; and add salt and/or rinse aid if required.
6. Close the door of the dishwasher.

Program selection

1. Turn on your dishwasher with the On-Off / Program Selection knob.
2. Select the proper washing program for your dishes considering the program information and average consumption values table.
3. Select the program you have determined with the program selection knob.

Auxiliary functions

Washing programmes of your dishwasher are designed to obtain the best cleaning effect, considering the type of the soiling, soiling degree and properties of the dishes to be washed.

Auxiliary functions are provided in order to enable you to save time, water and energy and to perform a more comfortable washing with conditions specific to you.

ⓘ Auxiliary functions may cause changes in the programme duration.

ⓘ Auxiliary functions are not suitable for all washing programmes. Indicator of the auxiliary function that is not compatible with the programme will not be active.

To add auxiliary function to the programme:

1. Select the desired washing programme by pressing the programme selection key.
2. In the selected washing programme, if auxiliary function is selected, its symbol will be displayed on the screen. If the function key is pressed again, the symbol will disappear and selection is cancelled.

Fast+ Function

(Depends on model)

It shortens the time of the washing cycle selected and decreases water consumption by enabling washing under higher pressure.

Super Rinse Function

(Depends on model)

Depending on the type of the detergent used, if a detergent dissolving issue is encountered it will remove the resulting stains from the dishes and enables the optimum rinsing performance.

SteamGloss Function

(Depends on model)

It provides superior drying performance.

Half Load function

(Depends on model)

It is used to operate the machine without loading it completely.

1. Load your dishes in the machine as you like.
2. Turn the machine on with On/Off key.
3. Select the desired programme and press the Half Load key.

While the function is enabled, the Half Load indicator will come on in the function selection indicator and on the display.

4. Start the programme by pressing Start / Pause / Cancel key.

ⓘ With the Half Load function you can save both water and power while using the lower and upper baskets of the machine.

Tablet detergent function

(depends on model)

Allows to obtain a better drying performance from the multi-purpose detergents called as all in one detergents such as 2in1, 3in1, 4in1, 5in1 and etc., depending on the hardness level of the tap water.

Press and hold the tablet function buttons on the panel to activate the tablet function for appropriate programmes. Selecting the tablet function will light the Tablet Detergent indicator.

ⓘ If you have used the Tablet features during the last washing programme you used, Tablet function will remain active in the next washing programme you will select. If you do not want to use these functions in the new program you have selected, press the Tablet Detergent key until the indicator of the relevant function turns off.

ⓘ Tablet Detergent function may cause change in the programme duration.

Child (Key) Lock

(Depends on the Model)

You may prevent other persons from affecting and changing the program flow and delay time during the operation of the machine.

To activate the child lock:

1. Press and hold the Child (Key) Lock key for three seconds.
2. Child (Key) Lock indicator is illuminated and the key lock shall be activated.

ⓘ Child Lock prevents changing of the selected functions and deactivates the Start / Hold / Cancel key.

ⓘ Child lock does not lock the door of the machine.

ⓘ Child lock automatically deactivates if you turn off your machine with the On-off key.

To cancel the child lock:

1. Press and hold the Child (Key) Lock key for three seconds.
2. Child (Key) Lock indicator shall be turned off and the key lock shall be cancelled.

SelfDry

(Depends on the Model)

“SelfDry” feature of your machine increases drying efficiency of your machine and saves energy. There are two options: "OFF" and "ON".

To activate the feature of SelfDry:

1. Press SelfDry button. When the function is active, the indicator showing the selection of the function lights up.
2. SelfDry is activated.

When you activate this function, the door of your machine opens automatically at the end of the washing program.

To deactivate the feature of SelfDry:

1. Press the button of SelfDry. When the function is deactivated, the indicator showing the selection of the function turns off.
2. SelfDry is deactivated.

SelfDry opens the door of the machine at the end of the washing circle, thanks to the "door opening shafts". This process takes approximately 2 minutes. If the power fails while the shafts are moving out, do not force to close the door. When the power is back, the process shall be completed, and the shafts shall return to their initial position.

The function of SelfDry may change the duration of the selected program.

Floor illumination
Warning to show that machine is in washing phase

(depends on the model)
Your machine reflects a light to the floor during the washing process. This light turns off after the washing process is complete.

Floor illumination is activated automatically when the washing programme starts and remains lit until the end of the programme.

Floor illumination cannot be cancelled by the user.

Interior Lighting

(depends on the model)
Some models have interior lighting to illuminate the interior when the door is opened.

Programming the Washing Period

Time Delay key

You may delay the start time of the program up to 9 hours with the Delay key. Press the Start / Pause / Cancel key after delaying. Program starts automatically when the delay period is over.

With each press on the Delay key, 3-6-9 hours indicators start to flash. When you press the Start / Pause / Cancel key while the delay indicator you have selected is flashing, the delay indicator illuminated continuously and the count down starts. When the delay period is over, the delay indicator is turned off and the washing program you have selected starts.

The delay indicators are turned off if you press the Delay key while the 9-hour delay lamp is flashing. When you press the Start / Pause / Cancel key while the delay indicators are off, the program you have selected shall start without delay.

You may monitor the remaining time on the delay from the delay indicators. For example: When you select the 9-hour delay option, 6-hour indicator shall start to illuminate when the remaining time for the start of washing program is 6 hours.

To cancel the delay function:

When you press the Start / Pause / Cancel key for 3 seconds while the delay function is active, the delay process shall be cancelled.

Starting of the program

Press the Start / Pause / Cancel key to start your machine after selecting the program and additional functions.

Machine softens the water as per the hardness of the mains water. The washing period may differ due to the water softening process. Moreover, program period may also change while the program is being executed as a result of the room temperature, mains water temperature and the amount of dishes.

Care to avoid opening of the door while the machine is being operated. If you need to open the door, stop the machine by pressing the Start / Pause / Cancel key. Then open the door of the machine. Be careful as steam may come out when you open the door of the machine. Press the Start / Pause / Cancel key again after closing the machine door. Program shall be resumed.

To ensure that the water remaining on the dishes and inside the machine is completely drained and that the water softener is removed after rinsing operation, your machine resumes operation at drying cycle after keeping silent for a while.

Monitoring of Program

You may monitor the current program step of the program you have selected from the program step monitoring indicators on the control panel.

If the drying indicator is illuminated, machine shall perform drying silently for approximately 30 to 60 minutes. After this period, the drying indicator is turned off and End indicator shall be illuminated. The End light is illuminated when the washing program you have selected is complete.

Cancelling the program

1. Press the Start / Pause / Cancel key for 3 seconds to cancel the program.
2. Release the key when Washing and Drying indicators start to flash. The water inside the machine shall be drained within 45 seconds. Program shall be cancelled when the Washing and Drying indicators are turned off and End indicator is illuminated. Then, you may select a new program and start it.

Detergent or rinse aid may remain inside the machine and/or the dishes being washed as per the step of the program you have cancelled.

When the Program Selection Knob is brought to “Off” position, the washing program is ended and machine becomes ready for selection of program again. Water and detergent may remain inside the machine if the washing is ended in such a way.

Low Salt Warning indicator

Check the low salt warning indicator to determine if the softening salt available in your machine is adequate. You shall add salt to the salt compartment when the low salt warning indicator starts to illuminate.

Setting of water hardness level is described in the Quick Guide.

Low Rinse Aid Warning indicator

Check the low rinse aid warning indicator to determine if the rinse aid available in your machine is adequate. You shall add rinse aid to the rinse aid compartment when the low rinse aid warning indicator starts to illuminate.

Setting the Rinse aid Amount

1. While the Program Selection Knob is “Off”, press and hold the Half Load/ Tablet function key of your machine and rotate the Program Selection Knob one step clockwise and keep the function key pressed for 3 seconds. Machine switches to rinse aid setting mode.
2. When the rinse aid setting mode is activated, the rinse aid level in the memory is indicated by the program monitoring LEDs for 5 seconds.
3. Bring the Program selection knob to the proper position for the new rinse aid amount setting.
4. Press the Start / Pause / Cancel key once to record the selected setting in the memory.
5. Machine returns to normal mode when you bring the Program Selection knob to “Off” position again.

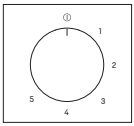

Rinse Aid Amount	Level of program selection knob	Rinse Aid Setting Indicator
Applies 1 dose of rinse aid.	1	The washing indicator on the panel illuminates.
Applies 2 dose of rinse aid.	2	The drying indicator on the panel illuminates.
Applies 3 dose of rinse aid.	3	The End indicator on the panel illuminates.
Applies 4 dose of rinse aid.	4	The Washing, Drying and End indicators on the panel illuminate.
No dose of rinse aid is applied.	5	The Washing, Drying and End indicators on the panel flashes with intervals of 1 second.

End of Program

Program End indicator illuminates when the washing program has ended.

1. Turn off your machine with the On-Off / Program Selection knob.
2. Turn off the tap.
3. Remove the plug from the outlet.

After washing your dishes, keep them inside the machine for cooling for approximately 15 minutes. Your dishes shall dry faster if you leave the door of your machine ajar within this period. This shall improve the drying efficiency of the machine.

7- Maintenance and cleaning

⚠ Read “Safety Instructions” section first!

⚠ Unplug the product and turn off the tap before attempting any cleaning procedures.

ⓘ Do not use abrasive substances for cleaning.

ⓘ Clean the filter and impellers at least once a week in order for the machine to operate efficiently.

Service life of the product extends and frequently faced problems decrease if it is cleaned at regular intervals.

Cleaning the outer surface of the product

NOTICE Clean the outer surface and door gaskets of the product gently with a mild cleaning material and damp cloth. Wipe the “control panel” only with a damp cloth.

Cleaning the interior of the machine

- Clean the interior of the machine by operating the machine in the programme running at the highest possible temperature with detergent or special machine cleaning agents monthly. This operation will help removal of leftovers and limescale from the interior of the machine.
- If water has remained in the machine, drain the water by performing the procedures under the topic "Cancelling a programme". If the water cannot be discharged, remove the filters as specified in the "Cleaning the filters" section and check if there are any leftover deposits that have accumulated at the bottom of the machine, blocking the water path. Clean if necessary.

Cleaning the filters

Clean the filters at least once a week in order for the machine operates efficiently. Check if food residues are left on the filters. If there are food residues on filters, take them out and clean well under running water.

1. Turn the micro filter (1) and coarse filter (2) assembly counter clockwise and pull it out from its seating.(depends on model)

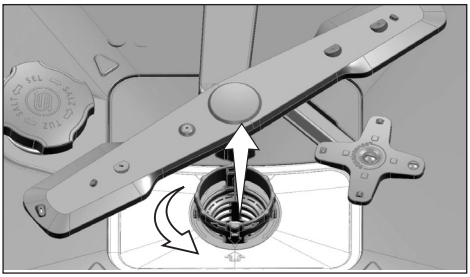

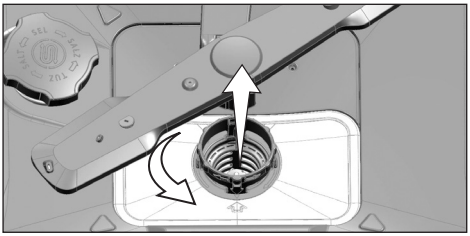

2. Pull out the metal/plastic filter (3) from the seating.

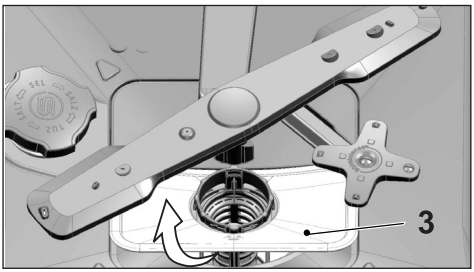

3. Press the two pawls on the coarse filter inwards and separate the coarse filter from the assembly.

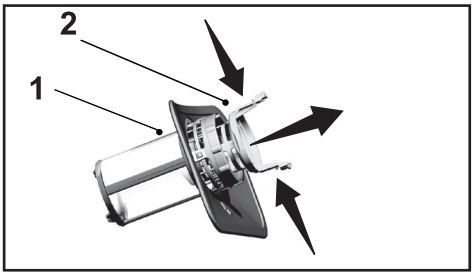

4. Clean all three filters under tap water by means of a brush.
5. Place the metal/plastic filter.
6. Place the coarse filter into the micro filter. Make sure that it is properly seated. Turn the coarse filter clockwise until a "click" sound is heard.

Do not use the dishwasher without filter.

Incorrect placement of the filters will reduce washing efficiency.

Micro Filter Cleaning Mechanism

(depends on model)

Filter cleanliness is increased by 80% with the micro filter cleaning system available on your machine.

If your machine has auto filter cleaning feature do not remove the micro filter cleaning mechanism (4) for cleaning.

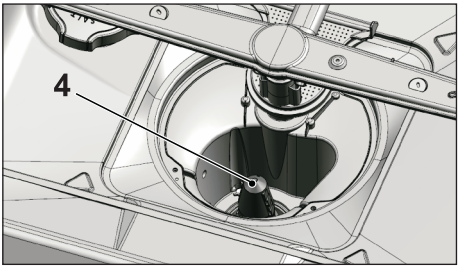

Cleaning the hose filter

Damages on the machine that may be caused by impurities coming from the urban supply water or your own water installation (such as sand, dirt, rust, etc.) can be prevented by means of the filter attached to the water inlet hose. Check the filter and the hose regularly and clean them if necessary.

1. Turn off the tap and remove the hose.
2. After taking out the filter, clean it under running tap water.
3. Place the cleaned filter back to its seat in the hose.
4. Install the hose to tap.

(depends on model)

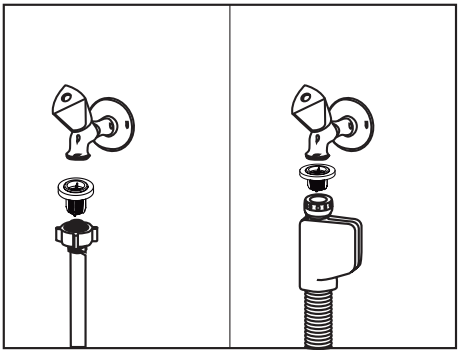

Cleaning the impellers

Clean the impellers at least once a week in order for the machine operates efficiently.

Lower impeller

Check if the holes on the lower impeller (1) are clogged. If they are clogged, remove and clean the impeller. You can pull the lower impeller up to remove it.
(depends on model)

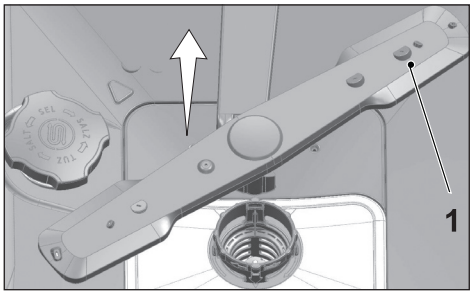

Check if the holes on the lower impeller assembly are clogged. If they are clogged, remove and clean the impeller assembly.
(depends on model)

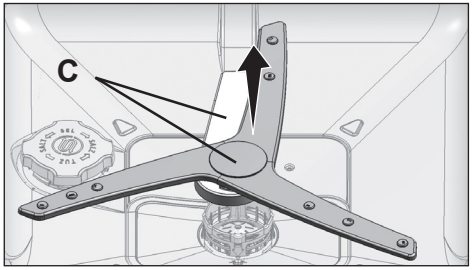

To remove and clean the lower impeller assembly together, hold by one hand from the (C) points shown in the figure and pull up to remove. After cleaning, follow these steps in reverse order to reinstall the impeller assembly.

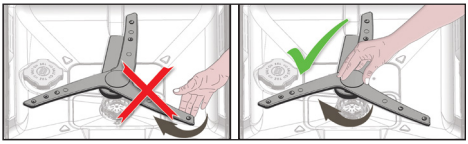

Do not try to rotate the impeller by holding its ends. Trying to rotate the end sections may cause the gear system within the impeller to break.

Upper impeller

Check if the holes on the upper impeller (1) are clogged. If they are clogged, remove and clean the impeller. Turn its nut to left to remove the upper impeller.
Make sure that the nut is tightened well when installing the upper impeller.

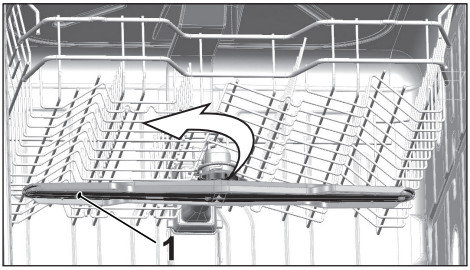

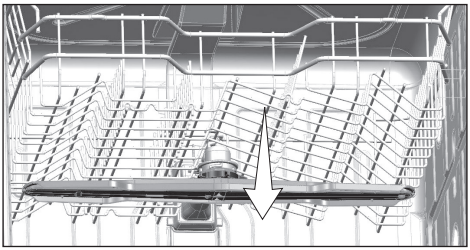

8- Troubleshooting

Machine does not start.

- Power cable is unplugged. >>> Check if the power cable is plugged in.
- Fuse is blown. >>> Check the fuses in your house.
- Water is cut. >>> Make sure that the water inlet tap is open.
- Door of the machine is open. >>> Make sure that you have closed the door of the machine.
- On / Off button is not pressed. >>> Make sure that you have turned on the machine by pressing the On / Off button.

Dishes are not washed clean

- Dishes are not placed orderly in the machine. >>> Load the dishes as described in the user manual.
- Selected programme is unsuitable. >>> Select a programme with a higher temperature and cycle time.
- Impellers are stuck. >>> Prior to starting the programme, turn the lower and upper impellers by hand to make sure that they rotate freely.
- Impeller holes are clogged. >>> Lower and upper impeller holes might be clogged with food remnants such as lemon pips. Clean the impellers regularly as illustrated in section “Cleaning and Care”.
- Filters are clogged. >>> Check if the filter system is clean. Clean the filter system regularly as illustrated in section “Cleaning and Care”.
- Filters are installed incorrectly. >>> Check the filter system and make sure that it is installed correctly.
- Baskets are overloaded. >>> Do not overload the baskets in excess of their capacity.
- Detergent is stored under unsuitable conditions. >>> If you are using powder detergent, do not store the detergent package in humid places. Keep it in a closed container if possible. For ease-of-storing, we recommend you to use tablet detergents.
- Detergent is not sufficient. >>> If you are using powder detergent, adjust the amount of detergent according to the soiling degree of your dishes and/or programme definitions. We recommend you to use tablet detergents for optimum results.
- Rinse aid is not sufficient. >>> Check the rinse aid indicator and add rinse aid if necessary. Increase the rinse aid setting if there is enough amount of rinse aid in the machine.
- Detergent dispenser lid is left open. >>> Make sure that the detergent dispenser lid is closed tightly after adding detergent.

Dishes are not dry at the end of cycle

- Dishes are not placed orderly in the machine. >>> Place your dishes in a way that no water will accumulate in them.

- Rinse aid is not sufficient. >>> Check the rinse aid indicator and add rinse aid if necessary. Increase the rinse aid setting if there is enough amount of rinse aid in the machine.
- Machine is unloaded right after the programme is over. >>> Do not unload your machine right after washing process is completed. Slightly open the door and wait for evacuation of the steam inside for a while. Unload the dishes after the pieces cool down to a touchable level. Start unloading process from the lower basket. Thus, dropping of water remained on a piece at upper basket onto the pieces at lower basket is prevented.
- Selected programme is unsuitable. >>> Since rinsing temperature is low at programmes with short duration, drying performance will also be low. Select programmes with longer duration for a higher drying performance.
- Surface quality of the kitchen utensils is deteriorated. >>> Desired washing performance can not be obtained on kitchen utensils with deteriorated surfaces and it is not suitable to use such utensils in terms of hygiene as well. Also, water can not flow easily on deteriorated surfaces. It is not recommended to wash such kitchen utensils in dishwasher.

i It is normal that drying complaints can be experienced with Teflon kitchen utensils. It is associated with the structure of Teflon. Since the surface tensions of Teflon and water are different, water droplets will remain as beads on the Teflon surface.

Tea, coffee or lipstick stains remain on dishes.

- Selected programme is unsuitable. >>> Select a programme with a higher temperature and cycle time.
- Surface quality of the kitchen utensils is deteriorated. >>> Tea and coffee stains or other dye spots may not be cleaned in dishwasher when they have penetrated in deteriorated surfaces. Desired washing performance can not be obtained on kitchen utensils with deteriorated surfaces and it is not suitable to use such utensils in terms of hygiene as well. It is not recommended to wash such kitchen utensils in dishwasher.
- Detergent is stored under unsuitable conditions. >>> If you are using powder detergent, do not store the detergent package in humid places. Keep it in a closed container if possible. For ease-of-storing, we recommend you to use tablet detergents.

Lime traces remain on dishes and glassware gains a misty appearance

- Rinse aid is not sufficient. >>> Check the rinse aid indicator and add rinse aid if necessary. Increase the rinse aid setting if there is enough amount of rinse aid in the machine.
- Water hardness setting is low or salt level is insufficient >>> Measure the hardness of the supply water appropriately and check the water hardness setting.
- Salt leakage exists. >>> Pay attention not to spill salt around the salt filling hole while adding salt. Make sure that the salt reservoir lid is tightly closed after finishing the filling process. Run the prewash programme to remove the salt that spilled inside the machine. Since the salt granules that will remain under the lid will dissolve during prewash, causing the lid loosen, check the lid once again at the end of the programme.

There is a different odour in the machine

A new machine has a peculiar odour. It will fade out after a couple of washes.

- Filters are clogged. >>> Check if the filter system is clean. Clean the filter system regularly as illustrated in section “Cleaning and Care”.
- Dirty dishes are kept in dishwasher for 2-3 days. >>> If you are not going to start the machine right after you have put the dishes into it, remove the remnants on the dishes and run the Prewash programme without detergent every 2 days. In such cases, do not close the door of the machine completely in order to avoid odour build up in machine. You can also use commercially available odour removers or machine cleaners.

Rust, discoloration or surface deterioration occurs on dishes

- Salt leakage exists. >>> Salt may cause deterioration and oxidation on metal surfaces. Pay attention not to spill salt around the salt filling hole while adding salt. Make sure that the salt reservoir lid is tightly closed after finishing the filling process. Run the prewash programme to remove the salt that spilled inside the machine. Since the salt granules that will remain under the lid will dissolve during prewash, causing the lid loosen, check the lid once again at the end of the programme.
- Salty food remnants have remained on dishes for a long time. >>> If cutlery soiled with such foods will be kept waiting in machine, dirt must be removed by prewash or dishes must be washed without being kept waiting.
- Electric installation is not grounded. >>>Check if your machine is connected to the actual grounding line. Otherwise, the static electric created in the product causes arcs on the surfaces of metal items creating pores, removing the protective cover on the surface and causing discoloration.
- Intensive cleansers such as bleaches are used. >>> Protective cover on metal surfaces gets damaged and looses its efficiency in time when it gets in contact with cleansers such as bleach. Do not wash your dishes with bleach.
- Metal items particularly knives are used for purposes other then their intended uses. >>> Protective cover on the edges of knives may get damaged when they are used for purposes such as opening cans. Do not use metal kitchen utensils out of their intended uses.
- Cutlery are made of low quality stainless steel. >>> Corrosion on such items is inevitable; they should not be washed in dishwashers.
- Kitchen utensils that are already corroded are washed in dishwasher. >>> Rust on a corroded item can migrate to other stainless steel surfaces and cause corrosion on those surfaces as well. Such items should not be washed in dishwashers.

Detergent remains in detergent dispenser.

- Detergent dispenser was damp when adding detergent. >>> Make sure that the detergent dispenser is dried well prior to filling it with detergent.
- Detergent is added long before the washing process. >>> Pay attention to add detergent shortly before start-up of the washing.

- Opening of the detergent dispenser lid is prevented during washing. >>> Place the dishes in a way that will not prevent the detergent dispenser lid from opening and the water going into the machine from impellers.
- Detergent is stored under unsuitable conditions. >>> If you are using powder detergent, do not store the detergent package in humid places. Keep it in a closed container if possible. For ease-of-storing, we recommend you to use tablet detergents.
- Impeller holes are clogged. >>> Lower and upper impeller holes might be clogged with food remnants such as lemon pips. Clean the impellers regularly as illustrated in section “Cleaning and Care”.

Decorations and ornaments on kitchen utensils are being erased.

ⓘ Decorated glasses and decorated lustre porcelains are not suitable for washing in the dishwasher. Manufacturers of some glassware and porcelain tableware items do not recommend washing such kitchen utensils in the dishwashers either.

Dishes are scratched.

ⓘ Kitchen utensils that contains or are made of aluminium should not be washed in dishwasher.

- Salt leakage exists. >>> Pay attention not to spill salt around the salt filling hole while adding salt. Spilled salt can cause scratches. Make sure that the salt reservoir lid is tightly closed after finishing the filling process. Run the prewash programme to remove the salt that spilled inside the machine. Since the salt granules that will remain under the lid will dissolve during prewash, causing the lid loosen, check the lid once again at the end of the programme.
- Water hardness setting is low or salt level is insufficient >>> Measure the hardness of the supply water appropriately and check the water hardness setting.
- Dishes are not placed orderly in the machine. >>> When placing the glasses and other glassware into the basket lean them not against other dishes but the edges or racks of the basket or the glass support tines. Striking of the glasses to each other or to other dishes due to the impact of water during washing can cause breaks, or scratches on their surfaces.

A smear remains on glasses that resembles milk stain which can not be removed when wiped by hand. A bluish / rainbow appearance occurs when the glass is pointed to light.

- Excessive rinse aid is used. >>>Lower rinse aid setting. Clean the spilled rinse aid when adding rinse aid.
- Corrosion has occurred on glass due to soft water. >>> Measure the hardness of the supply water appropriately and check the water hardness setting. If your supply water is soft (<5 dH), do not use salt. Choose programmes that wash in higher temperatures (e.g. 60-65°C). You can also use glass protective detergents that are commercially available.

Foam forms in the machine.

- Dishes are washed with hand-wash detergent by hand but not rinsed before placing them into the machine. >>> Hand-wash detergents do not contain antifoam. There is no need to hand-wash the dishes before placing them into the machine. Removing the coarse soil on the dishes under tap water, with a tissue paper or fork will be sufficient.
- Rinse aid has spilled into the machine when adding rinse aid. >>> Take care that rinse aid is not spilled in the machine when you are filling it. Clean any spilled rinse ait with the help of a tissue paper/towel.
- Lid of the rinse aid reservoir is left open. >>> Make sure that the lid of the rinse aid reservoir is closed after adding rinse aid.

Kitchen utensils are broken.

- Dishes are not placed orderly in the machine. >>> Load the dishes as described in the user manual.
- Baskets are overloaded. >>> Do not overload the baskets in excess of their capacity.

Water remains in the dishwasher at the end of the programme.

- Filters are clogged. >>> Check if the filter system is clean. Clean the filter system regularly as illustrated in section “Cleaning and Care”.
- Discharge hose is clogged/blocked. >>> Check the discharge hose. If necessary, remove the discharge hose, clear the blockage and insert is as illustrated in the user manual.

If you cannot eliminate the problem although you follow the instructions in this section, consult your dealer or the Authorised Service Agent. Never try to repair a nonfunctional product yourself.